Bends

BPDL-90

Description

Pressed ventilation duct elbows dedicated for SPIRO ducts and regular ventilation ducts. Linear weld and double EPDM rubber gasket ensure class D insulation according to Eurovent standard in the entire ventilation and recuperation system. without additional sealing agents. To connect the elbow to the ventilation duct, slip it into the duct. Pressed form results in less resistance and lower pressure drop.

Example identification

Product code: **BPDL - aaa - 90**

type

Ød$_1$

°

Technical Data

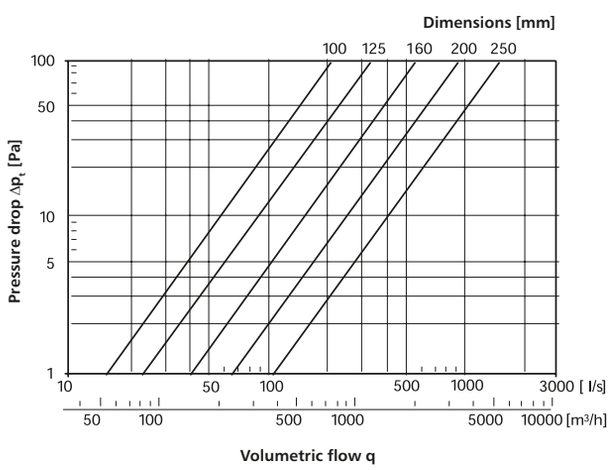

Dimensions

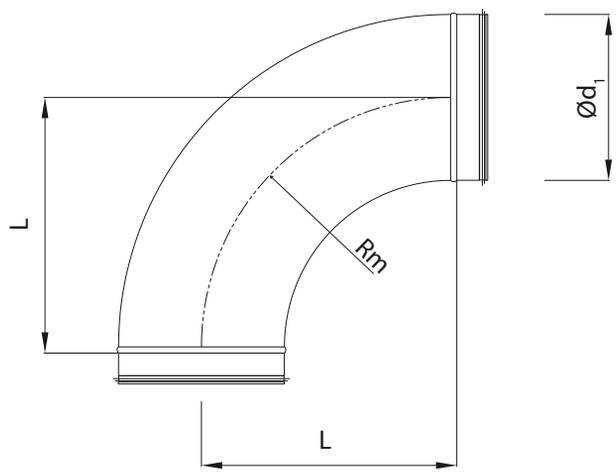

$r_m \approx 1{,}5 \times d_1$

Type [mm]	*Ød$_{1\ nom}$ [mm]*	*L [mm]*	*Weight [kg]*
BPDL-100-90	100	150	0,6
BPDL-125-90	125	190	0,8
BPDL-150-90	150	225	1,2
BPDL-200-90	200	300	2,1
BPDL-250-90	250	375	2,7

ALNOR® systemy wentylacji
jest prawnie chronionym znakiem i technicznym patentem. Prawo do zmian zastrzeżone.

Bends

BPD-90

Description

Pressed ventilation duct elbows dedicated for SPIRO ducts and regular ventilation ducts. Linear weld improves the tightness of the ventilation system, whereas the doubled-over ending creates a safe edge to protect your hands during installation. To connect the elbow to the ventilation duct, slip it into the duct. Pressed form results in less resistance and lower pressure drop. To improve installation tightness to class B insulation, we recommend to seal the connection point with TAL, MET, or DUCT insulation tape.

Example identification

Product code: **BPD - aaa - 90**

type

Ød$_1$

°

Technical Data

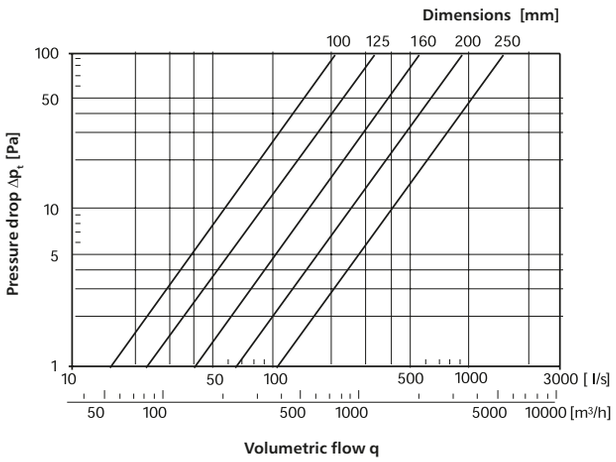

Dimensions

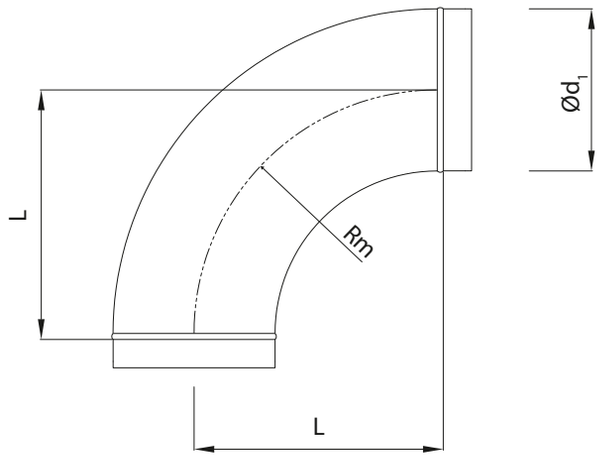

$r_m \approx 1{,}5 \times d_1$

Type [mm]	*Ød$_{1\ nom}$ [mm]*	*L [mm]*	*Weight [kg]*
BPD-100-90	100	150	0,6
BPD-125-90	125	190	0,8
BPD-150-90	150	225	1,2
BPD-200-90	200	300	2,1
BPD-250-90	250	375	2,7

ALNOR® systemy wentylacji
jest prawnie chronionym znakiem i technicznym patentem. Prawo do zmian zastrzeżone.

Bends

BPDL-45

Description

Pressed ventilation duct elbows dedicated for SPIRO ducts and regular ventilation ducts. Linear weld and double EPDM rubber gasket ensure class D insulation according to Eurovent standard in the entire ventilation and recuperation system. without additional sealing agents. To connect the elbow to the ventilation duct, slip it into the duct. Pressed form results in less resistance and lower pressure drop.

Example identification

Product code: **BPDL - aaa - 45**

type

Ød$_1$

°

Technical Data

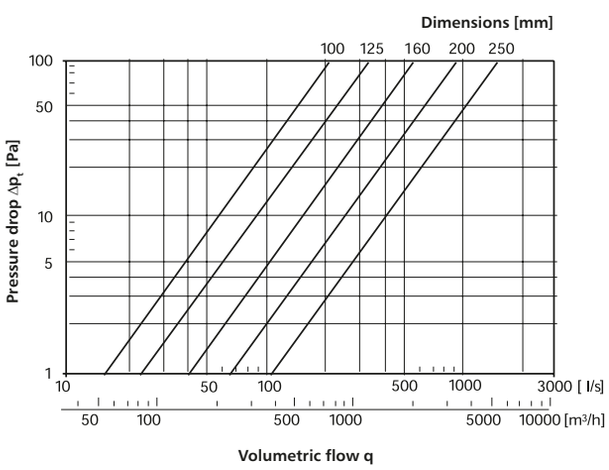

Dimensions

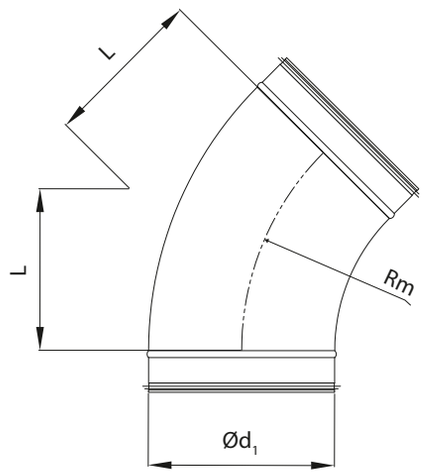

$r_m \approx 1,5 \times d_1$

Type [mm]	*Ød$_{1\ nom}$ [mm]*	*L [mm]*	*Weight [kg]*
BPDL-100-45	100	150	0,3
BPDL-125-45	125	190	0,4
BPDL-150-45	150	225	0,6
BPDL-200-45	200	300	0,9
BPDL-250-45	250	375	1,3

ALNOR® systemy wentylacji
jest prawnie chronionym znakiem i technicznym patentem. Prawo do zmian zastrzeżone.

Bends

BPD-45

Description

Pressed ventilation duct elbows dedicated for SPIRO ducts and regular ventilation ducts. Linear weld improves the tightness of the ventilation system, whereas the doubled-over ending creates a safe edge to protect your hands during installation. To connect the elbow to the ventilation duct, slip it into the duct. Pressed form results in less resistance and lower pressure drop. To improve installation tightness to class B insulation, we recommend to seal the connection point with TAL, MET, or DUCT insulation tape.

Example identification

Product code: **BPD - aaa - 45**

type

Ød$_1$

°

Technical Data

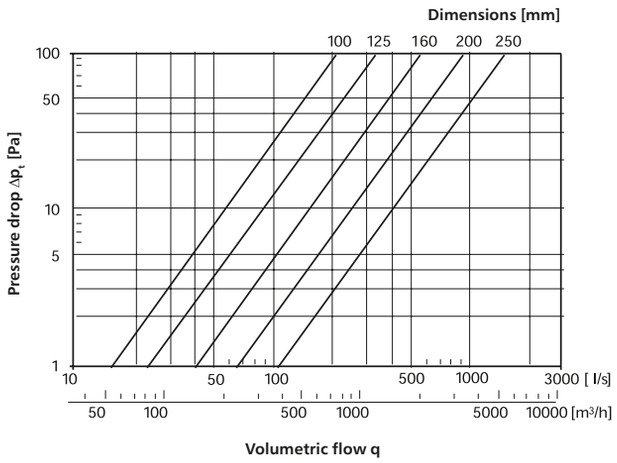

Dimensions

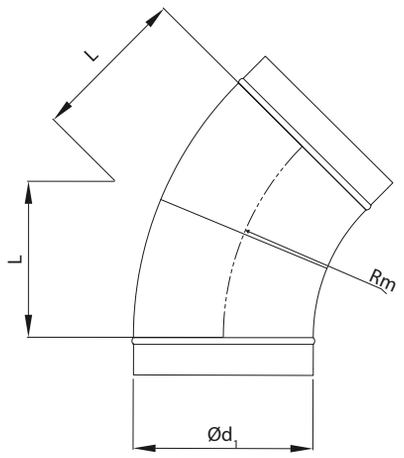

$r_m \approx 1{,}5 \times d_1$

Type [mm]	*Ød$_{1\ nom}$ [mm]*	*L [mm]*	*Weight [kg]*
BPD-100-45	100	150	0,2
BPD-125-45	125	190	0,3
BPD-150-45	150	225	0,6
BPD-200-45	200	300	0,9
BPD-250-45	250	375	1,3

ALNOR® systemy wentylacji
jest prawnie chronionym znakiem i technicznym patentem. Prawo do zmian zastrzeżone.