Ducts and fittings insulated with rubber mat

Fovent®system

The manufacturer reserves the right to amend product dimensions and technical data due to their constant improvement.

About the system

The ventilation and air conditioning ducts and fittings insulated with rubber mat constitute the complete **Fovent®system** piping . It consists of round spiro pipes and ventilation fittings: elbows, T-pipes, reducing pipes, joints and stub pipes. The inner diameters comply with the standard round elements according to the following tolerances. The insulation made of rubber mat is available in 4 sizes: 9, 13, 19 and 25 mm.

Tolerance for ducts

$Ød_{nom}$ [mm]	$Ød_{min.}$ - $Ød_{max.}$ [mm]
80	80,0 - 80,5
100	100,0 - 100,5
125	125,0 - 125,5
150	150,0 - 150,6
160	160,0 - 160,6
200	200,0 - 200,7
250	250,0 - 250,8

Fovent®system is based on the aforementioned tolerances for ducts, so as to ensure the sufficient system tightness. Diameters of elements made of sheet, in accordance with PN-EN-1506:2001

Tolerance for fittings

$Ød_{nom}$ [mm]	$Ød_{min.}$ - $Ød_{max.}$ [mm]
80	78,8 - 79,3
100	98,8 - 99,3
125	123,8 - 124,3
150	148,7 - 149,3
160	158,7 - 159,3
200	198,6 - 199,3

Dimension and angle tolerances

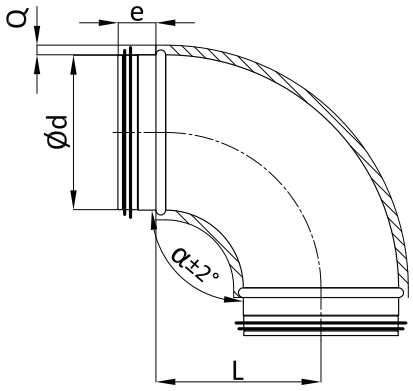

Length L, r, r_m	Tolerance
≤ 15	± 3
(15; 100	± 7
> 100	+ 10 - 15
L (ducts)	± 0,5%

System tightness

Internal system ducts and fittings of the Fovent®system constitute elements of the SPIRAL®system.
The SPIRAL®system is a universal system of spirally wound ventilation ducts and fittings with the factory-fixed rubber EPDM gasket. The gasket ensures insulation class D (certificate No. 0103/07) in accordance with PN-EN 12237

The insulation diagram according to EURO VENT 2.2 used to check the insulation of the SPIRAL®system.

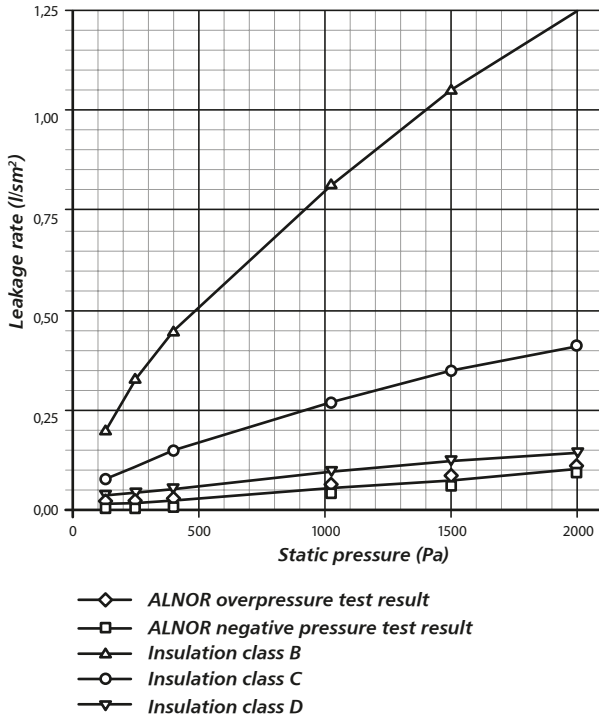

All the SPIRAL®system components are checked in terms of the gasket's quality according to the following procedure.

SPIRAL®system gasket check:
- Visual check of the surface quality.
- Check of the inner gasket diameter is important while using different types of materials.
- Check of the gasket profile dimensions and check of the dimensions in accordance with the assumed tolerances.
- Deformation test in the case of a simulated joint, using a device. Gasket flexibility test which ensures ultimate and accurate sealing.

Round ducts and fittings with the **SPIRAL®system** gasket are approved by SITAC for insulation class D.

Insulation

The mat, which is made of flexible foam with closed pores, based on synthetic rubber, has temperature insulation properties. It is assembled directly on round fittings and ducts applied for ventilation and air conditioning. Owing to this we benefit with time savings while assembling the insulated systems at the construction site.

Technical parameters:
Insulation thickness: 9/13/19/25mm - tolerance according to EN 14304
Flammability class: (EN 13501-1) B1 (B s3-d0)
Thermal conductivity (EN 12667):
for -30°C: ≤ 0.034 [W/mK]
for 0°C: ≤ 0.036 [W/mK]
for 40°C: ≤ 0.040 [W/mK]

Rubber gaskets

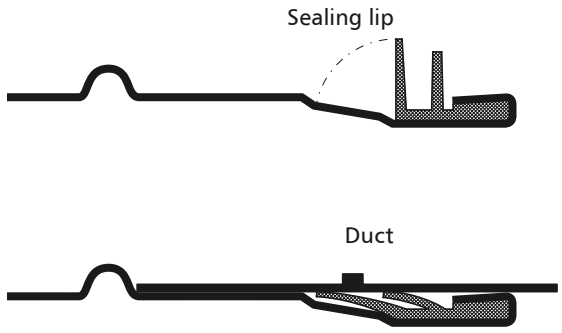

The gasket used is based on the homogenous EPDM rubber. The gasket is placed at the end of the fitting and tightly fixed along the fitting's circumference on the doubled-over fitting edge. This guarantees that the gasket, irrespective of the assembly conditions, always remains in place.

The rubber gasket must meet high quality requirements, therefore we have chosen the EPDM rubber. This material is extremely resistant to the impact of ozone as well as UV radiation and temperature fluctuations, thus ensuring long life.

Assembly instructions

The whole system is assembled as ordinary round ventilation ducts and fittings.
The nipple elements are inserted into the pipe or sleeve fitting until it is stopped on the rollover. Then, according to the following instructions, the lap screws are mounted after lifting the rubber mat.
The rubber mat from both elements is cut in such a way as to press one against the other after the assembly without additional insulation of the joints. If, despite this, the joint is required - the recommendation is as follows:
The TAPV-B self-adhesive tape – black PVC, 50 mm wide – perfect for joining two rubber mat covers with one another.
Rubber tape - self-adhesive, can ensure the additional thermal sealing of the joints.

Before the assembly
The pipe must be clean before the assembly.

Duct cutting
The ducts should be carefully cut, at an appropriate angle, then the edges should be cleaned of any shavings (blunted).

Assembly of fittings
- Check whether the ducts and fittings are not damaged. Pay particular attention to the gasket.
- Insert the gasket into the pipe until the stop is reached. Gently rotate the device for easy insertion.
- Fix the element to the duct by means of sheet-metal screws and rivets.
  For the proper fitting, maintain the appropriate order of assembly of the sheet-metal screws and rivets. Cross-assembly is recommended.
- The recommended thicknesses of rivets and sheet-metal screws are presented below:

Ød [mm]	*min. diameter [mm]*	*number of screws*
140 - 250	3,2	4

Arrange the sheet-metal screws evenly around the whole circumference, making sure that the gasket is not damaged, i.e. placing them 10 mm away from the edge of the duct and the stop on the element. In the event of the improper assembly, the holes after rivets or sheet-metal screws should be sealed.

Markings

ALNOR company products are labelled with construction product marking as well as the product code compliant with the technical specification in the present technical catalogue.

Round rubber-insulated Fovent®system ventilation pipes

F..-SPR-C

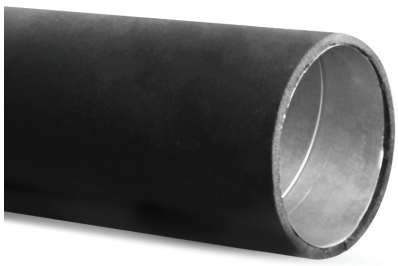

Description

The rubber-insulated spiro pipes are ideal for quickly assembled ventilation and air-conditioning systems. Owing to the factory-fitted rubber insulation, our time at the construction site is saved. The ventilation pipes are available in 1- and 2-metre sections, and in 9, 13, 19 and 25 mm insulations.

Marking example

Product code: **F09 - SPR - C - 100 - 2**

rubber thickness Q:
- 09
- 13
- 19
- 25

type

sheet:
- galvanised C
- acid-resistant K
- aluminium A

diameter

length L:
- 1
- 2

Dimensions

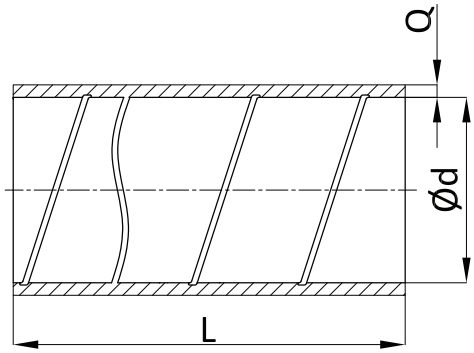

$Ød_{nom}$ [mm]	πd [m]	$\frac{\pi d^2}{4}$ [m²]
80	0,251	0,005
100	0,314	0,008
125	0,393	0,012
150	0,471	0,018
160	0,502	0,020
200	0,628	0,031
250	0,785	0,049

Fovent®system rubber-insulated air-conditioning elbow

F..-BPL

Description

Pressed ventilation elbows insulated with rubber mat, applied for installations running at places where their further insulation is impossible. They are perfectly fit for the duct air-conditioning system where the use of the 9-25 mm insulation is possible.

The elbows are available with standard 90- and 45- degree angles and in the short version as F..-BPKL-…-…, or in the short sleeve version as F..-BPKFL-…-…, which enters into the spiro pipe on one side and overlaps the frame of e.g. KN-RM-ddd valve on the other side.

Marking example

Product code: **F09 - BPL - - 100 - 90**

rubber thickness Q:
- 09
- 13
- 19
- 25

type
- standard r=1D **BPL**
- short r=0.8D **BPKL**
- short sleeve-nipple **BPKFL**

sheet:
- galvanised
- acid-resistant K
- aluminium A

diameter

angle

Dimensions

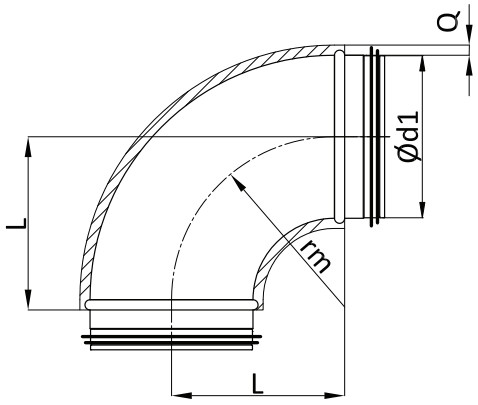

$Ød_{1\ nom}$ [mm]	F..-BPL L [mm]	F..-BPKL / F..BPKFL L [mm]
80	100	52
100	100	62
125	125	75
150	150	87
160	160	92
200	200	112
250	250	-

Technical data

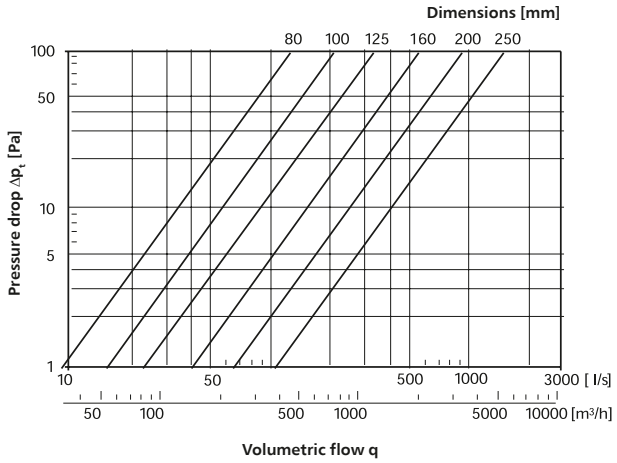

Data for F..BPL

Insulated ventilation round sleeve and nipple reducers

F..-RPCL

Description

The reducers in the duct ventilation and air-conditioning systems serve the purpose of increasing or decreasing the pressure in the air supply system. They are available in two versions: A - nipple version (e.g. F09-RPCL-125-100) to be joined on both sides with the ventilation spiro pipes; B - sleeve-nipple version (e.g. F09-RPCFL-125-100) in which the smaller diameter enters into the round pipe, and the larger diameter overlaps another fitting – most frequently the T-pipe.

Marking example

Product code: **F09 - RPCL - - 125 - 100**

rubber thickness Q:
- 09
- 13
- 19
- 25

type
- nipple-nipple **RPCL**
- sleeve-nipple **RPCFL**

sheet:
- galvanised
- acid-resistant K
- aluminium A

diameter
- d_1
- d_2

Dimensions

RPCFL

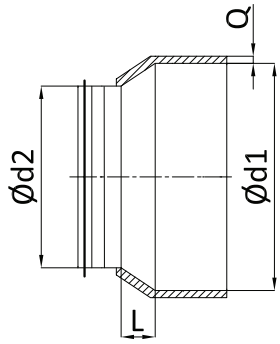

RPCL

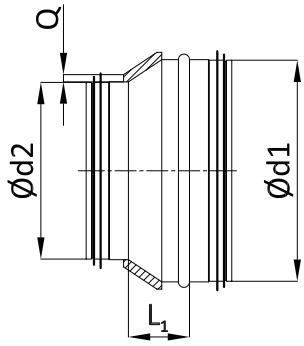

$Ød_{1\ nom}$ [mm]	$Ød_{2\ nom}$ [mm]	L [mm]	L_1 [mm]
100	80	10	18
125	80	22	28
	100	12	22
150	100	35	35
	125	30	30
160	80	15	48
	100	30	37
	125	17	26
	150	30	30
200	100	50	58
	125	37	46
	150	35	35
	160	20	26
250	125	40	70
	150	60	60
	160	45	53
	200	25	31

Insulated ventilation round sleeve and nipple reducers

F..-RPCL

Technical data

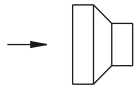

First reduction degree

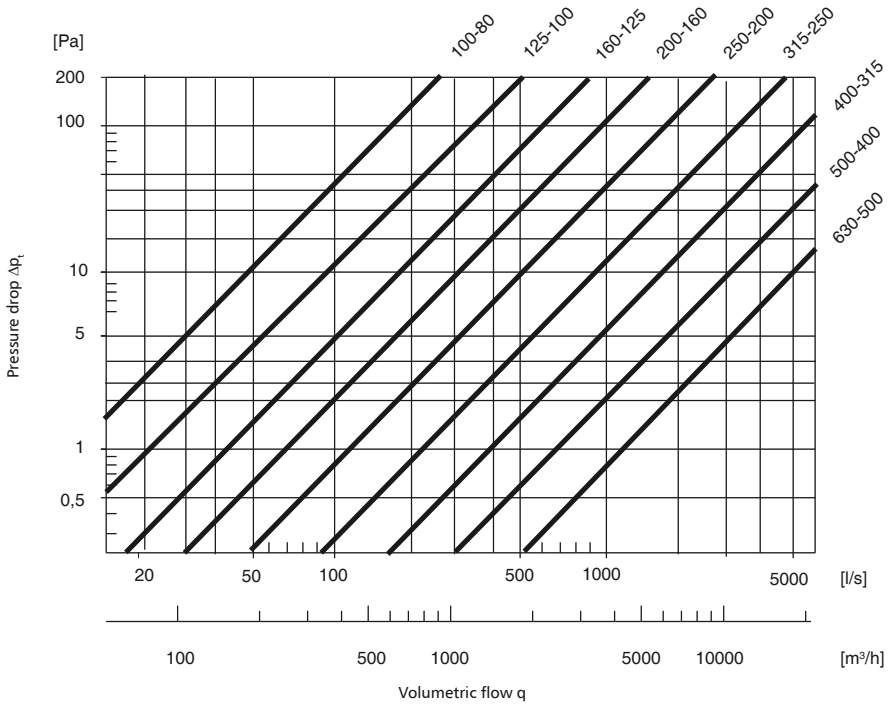

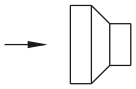

Second reduction degree

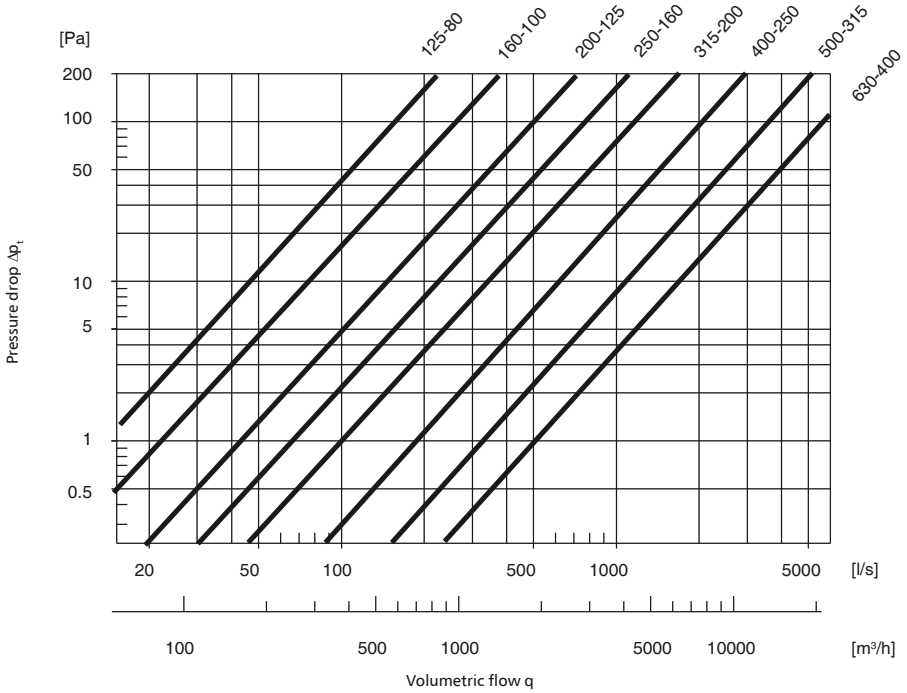

Round T-pipes with rubber insulation for the recuperation system

F..-TPCL

Description

T-pipes for distribution of air in the ventilation system. The most typical one has a branch-off with the same or similar diameter in relation to the pipe opening. The 90-degree angle is the most universal one - in the case that the non-standard nature of the system requires the 45-, 60-, 15-degree branch-off, it must be discussed and quoted separately.

Marking example

Product code: **F09 - TPCL - - 125 - 100**

rubber thickness Q:
- 09
- 13
- 19
- 25

type

sheet:
- galvanised
- acid-resistant K
- aluminium A

diameter
- d_1
- d_3

Dimensions

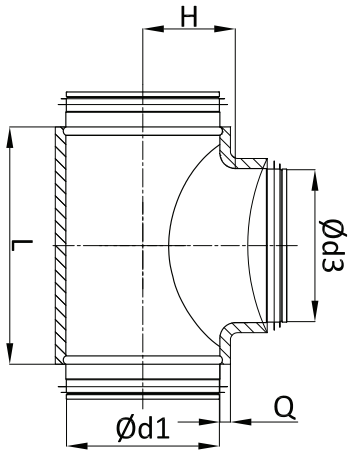

$Ød_1$ [mm]	$Ød_3$ / $Ød_4$ [mm]	L [mm]	H [mm]
80	80	140	52
100	80	126	65
	100	170	65
125	80	146	75
	100	184	78
	125	200	83
150	80	140	87
	100	175	90
	125	215	95
	150	260	95
160	80	140	92
	100	184	95
	125	229	100
	150	260	100
	160	229	105
200	80	140	112
	100	175	115
	125	215	115
	150	260	120
	160	281	125
250	80	156	137
	100	175	140
	125	220	145
	150	255	145
	160	256	150
	200	306	150
	250	307	150

Nipple connector with the gasket for joining the round pipes

F..-NSL

Description

The F09-NSL-ddd nipple connector is used to join round spiro ducts insulated with rubber mat. The factory-fit EPDM rubber gasket ensures the highest insulation class D for both the household and industrial ventilation systems.
The rubber width on the connector is applied to eliminate the missing part of the insulation on the spiro pipes, which is not complete because of the transport conditions.

Marking example

Product code: **F09 - NSL - - 100**

rubber thickness Q:
- 09
- 13
- 19
- 25

type

sheet:
- galvanised
- acid-resistant K
- aluminium A

diameter

Dimensions

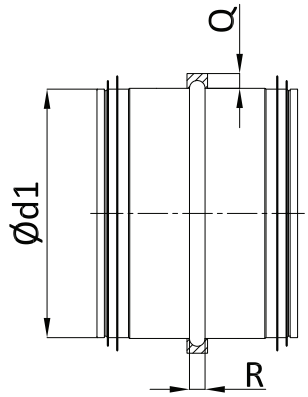

$Ød_{nom}$ [mm]	R [mm]
80	8
100	8
125	8
150	8
160	8
200	8
250	8

Insulated sleeve connector for pressed ventilation fittings

F..-MSF

Description

The sleeve joins two fittings which are of the size of the nipples - it overlaps the fitting such as an elbow, a T-pipe or a reducer on both sides. It complements the system of ventilation and air conditioning ducts and fittings.

Marking example

Product code: **F09 - MSF - - 100**

rubber thickness Q:
- 09
- 13
- 19
- 25

type sheet:
- galvanised
- acid-resistant K

aluminium A

diameter

Dimensions

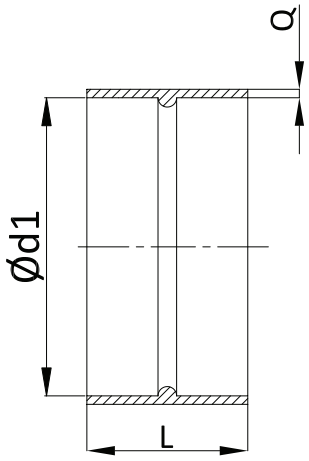

$Ød_{nom}$ [mm]	L [mm]
80	78
100	78
125	78
150	78
160	78
200	78
250	78