MANUAL

Good practices - assembly, transportation and storage of SPIRAL system

ver. 0419

Shipment and storage

- shipment and storage of spiral ducts should be conducted in storage racks (fig.1) or special wooden crate boxes (fig. 2) in order to protect ducts against sliding or moving during shipment and secure the duct surface from scratching
- additionally, in the company Alnor, ducts shipped in MOBILRACK storage racks are stretched around in two layers, therefore the duct doesn't "hook against" the other duct during transport and doesn't deform.

Fig. 1 MOBILRACK storage racks are available in our offer as returnable containers

Fig. 2 WOODBOX wooden crates are made from fumigated wood to enable shipping by sea

Fig. 3 Transport and storage of spiral ducts in storge racks or wooden crates significantly speeds up loading and unloading times

- it's recommended to use plastic end caps for spiral ducts in order to reach the highest ductwork cleanliness standards

Fig. 4 Plastic end caps - CS-SPR-PVC

- duct fittings and other SPIRAL system elements should be transported and stored in cardboard boxes, properly secured with stretch wrap or cardboard separators/spacers

Fig. 5 Example of properly packed and secured pallet for shipment

- ventilation components should be shipped to the place of installation in the appropriate carton boxes / packaging. It's recommended to remove ventilation components from packaging / carton boxes only at the place of assembly of the ductwork system to avoid contamination or damage of components during other construction works.

WARNING

It is not allowed to transport partially assembled duct system. Although, only in very special cases if situation could not be avoided partially assembled ductwork have to be transported with extreme care to avoid damage of joints and ductwork itself.

Duct cutting

- it's recommended to use a specially dedicated pipe saw (fig. 6) with a support roller set(to rotate the duct) (fig. 7) for cutting spiral ventilation ducts
- ducts have to be cut accurately at a 90° angle to duct axis
- edges have to be deburred after cutting
- after the duct has been cut check if the diameter has not deformed

Fig. 6 EQ-PIPE-CUT-100 pipe saw

Fig. 7 EQ-PIPE-ROLL-3 set of roller

EQ-PIPE-CUT-100 saw main advantages:

- straight cut end at 90 degree, with no sheet displacement
- does not burn through the zinc coating
- no time-consuming deburring of duct edges
- cuts the following ducts material: galvanized steel, aluminum and stainless steel - even with molybdenum add-on.

Fig. 8 Cutting duct using EQ-PIPE-CUT-100 pipe saw and a set of rollers

Watch techguide aboud dedicated tools for ventilation ductwork on our YT channel.

Assembly

- supports and suspensions of ducts and fittings should be installed in places that ensure an even load distribution, the length of the threaded rod should be selected in such a manner that the ducts are leveled (see Figures 9 and 10)

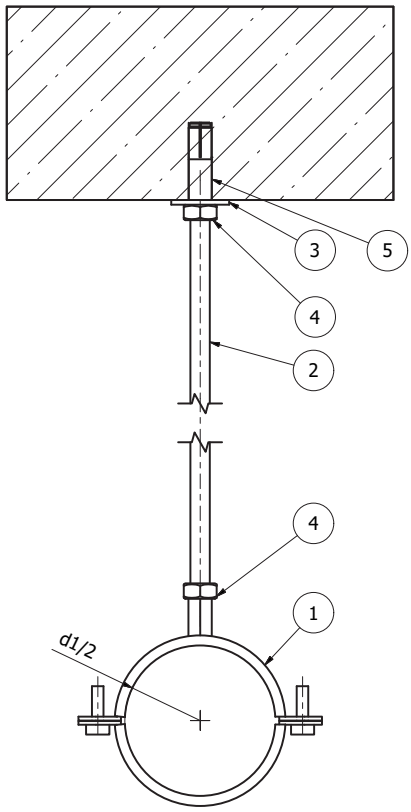

Item no	Qty	Product code	Product name
1	1	CLRL	suspension ring acc. the list below
2	1	PG10-2	threaded rod
3	1	PDS-P-10	round washer
4	2	NKS-M10	hexagon nut
5	1	TK10-4	steel drop-in anchor

Item	Diameter	Threaded rod & drop-in achor	Suspension ring	Spacing between fixings
1	80	M10	CLRL-80	2m
2	100	M10	CLRL-100	2m
3	112	M10	CLRL-112	2m
4	125	M10	CLRL-125	2m
5	140	M10	CLRL-140	2m
6	150	M10	CLRL-150	2m
7	160	M10	CLRL-160	2m
8	180	M10	CLRL-180	2m
9	200	M10	CLRL-200	2m
10	224	M10	CLRL-224	2m
11	250	M10	CLRL-250	2m
12	280	M10	CLRL-280	2m
13	300	M10	CLRL-300	2m
14	315	M10	CLRL-315	2m
15	355	M10	CLRL-355	2m
16	400	M10	CLRL-400	2m

NOTE! The length of the threaded rod should selected on the construction site.

Fig. 9 Diagram of fastening ventilation ducts in horizontal position, in a diameter range d1 ≤ 400 mm

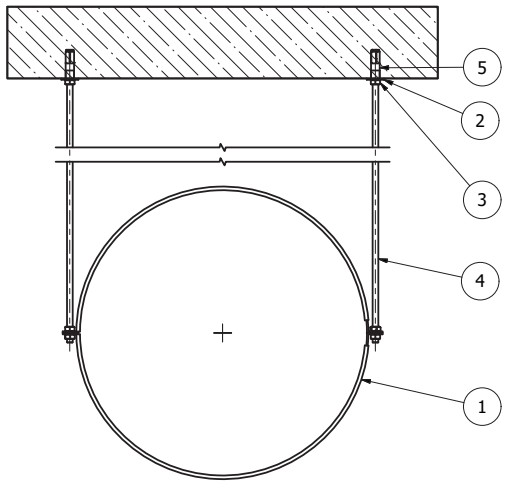

Item no	Qty	Product code	Product name
1	1	CLRL	suspension ring acc. the list below
2	2	PG10-2	threaded rod
3	6	PDS-P-10	round washer
4	2	NKS-M10	hexagon nut
5	2	TK10-4	steel drop-in anchor

Item	Diameter	Threaded rod & drop-in achor	Suspension ring	Spacing between fixings
1	450	M10	CLRL-450	2m
2	500	M10	CLRL-500	2m
3	560	M10	CLRL-500	2m
4	600	M10	CLRL-600	2m
5	630	M10	CLRL-630	2m
6	710	M10	CLRL-710	2m
7	800	M10	CLRL-800	2m
8	900	M10	CLRL-900	2m
9	1000	M10	CLRL-1000	2m
10	1120	M10	CLRL-1120	2m
11	1250	M10	CLRL-1250	2m
12	1400	M10	CLRL-1400	2m
13	1500	M10	CLRL-1500	2m
14	1600	M10	CLRL-1600	2m

NOTE! The length of the threaded rod should selected on the construction site.

Fig. 10 Diagram of fastening ventilation ducts in horizontal position, in a diameter range d1 ≥ 450 mm

- when changing the direction of the ductwork route, for example, by using a bend, it is important to maintain centric alignment of the duct-to-bend system (keep the same angle between the ducts as the angle of the duct fitting used)

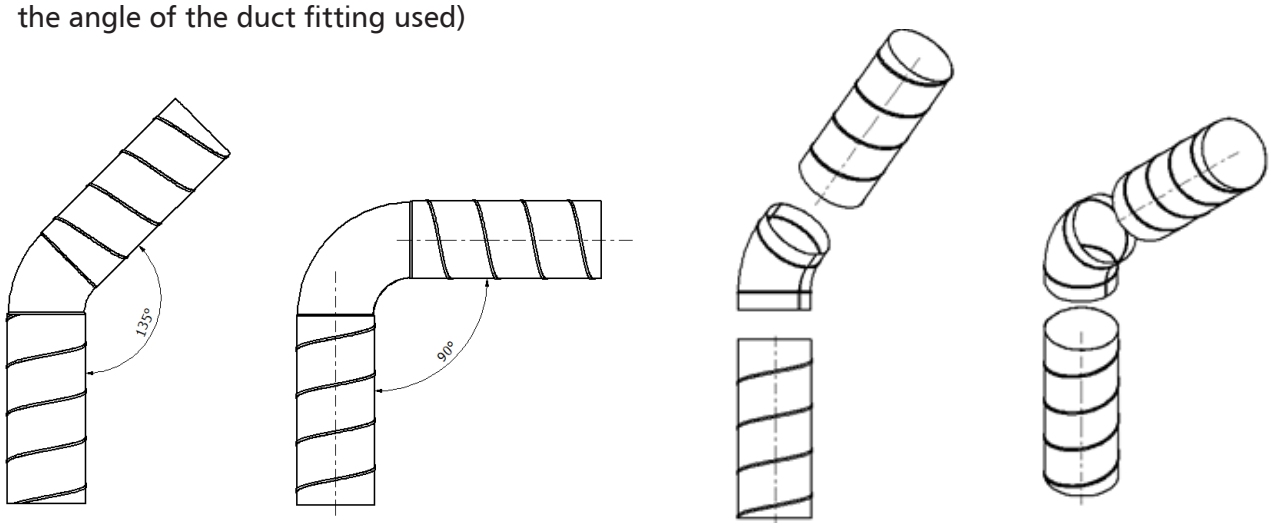

Fig. 11 Scheme of joining ventilation fittings and ducts

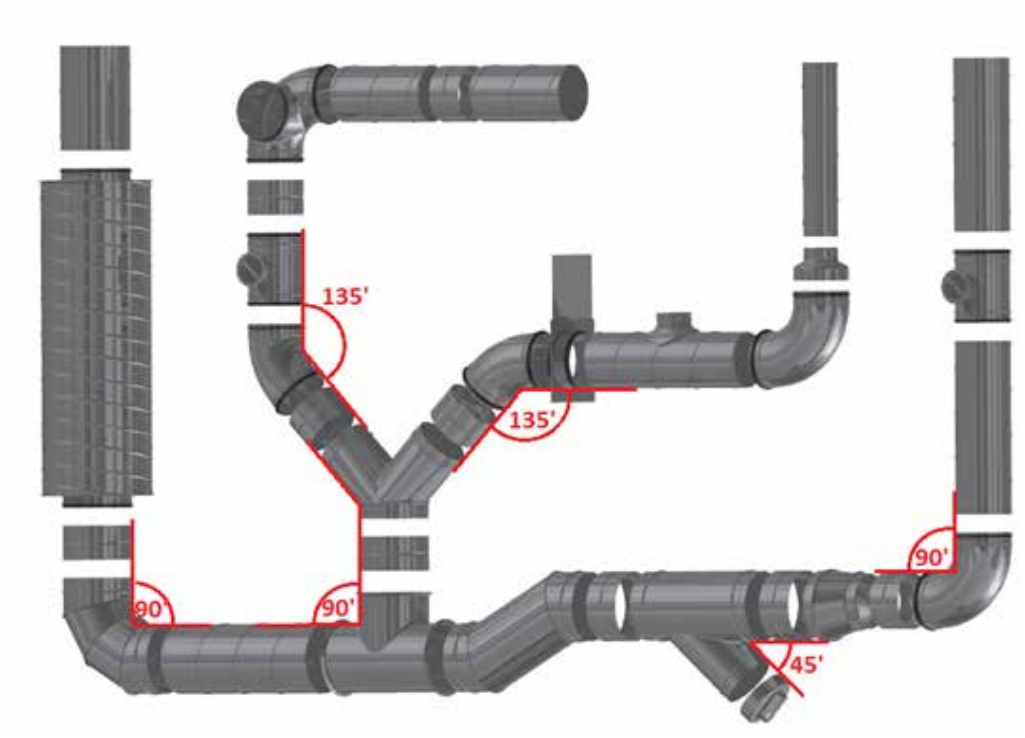

Fig. 12 Example of SPIRAL system installation

- check that the ducts and fittings are undamaged as well as inspect condition of the rubber seal
- when joining the duct with the fitting, sduct must be completely slipped to STOP FOLD limiter. Rotating slightly the duct will make it easier to slip it on the fitting - the duct should not be slipped over the STOP FOLD limiter placed on the fitting.

- fix the duct and the fitting with screws
- to make the joint tight it is important to maintain the correct order of screws tightening as well as use the right amount of them. Place the screws at an even spacing around the joint. It's recommended to install them crosswise, at distance of 10mm from the duct edge / female coupling edge (fig. 13 & 14)

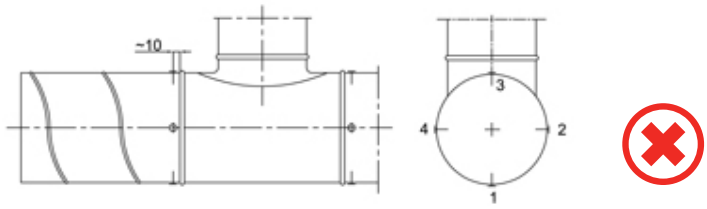

Fig. 13 Incorrect installation - wrong screws tightening order

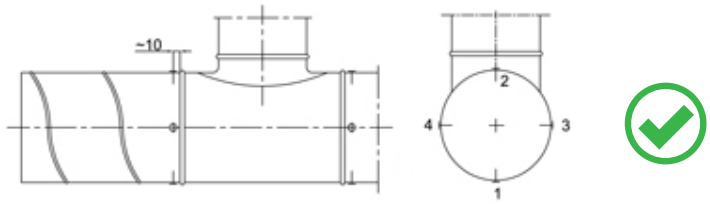

Fig. 14 Correct installation - correct screws tightening order

- the following screws size and quantity is recommended:

Ød [mm]	min. diameter [mm]	screws qty.
80 – 250	3.2	3
280 – 500	3.2	4
560 – 710	3.2	6
710 - 1250	4.0	12
1400 – 1600	4.0	16

- it's recommended to use correct self tapping screws where dp < d (fig. 15) to maintain the air tightness class D for ventilation system.

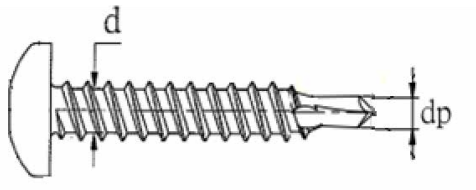

Fig. 15 Correct self tapping screw

- use female couplings instead of short duct section

Fig. 16 MSF female coupling

- The ductwork system air tightness depends on what duct and fittings system you choose - correctly mounted SPIRAL system with seals will comply to air tightness class D. The following mistakes should be avoided:

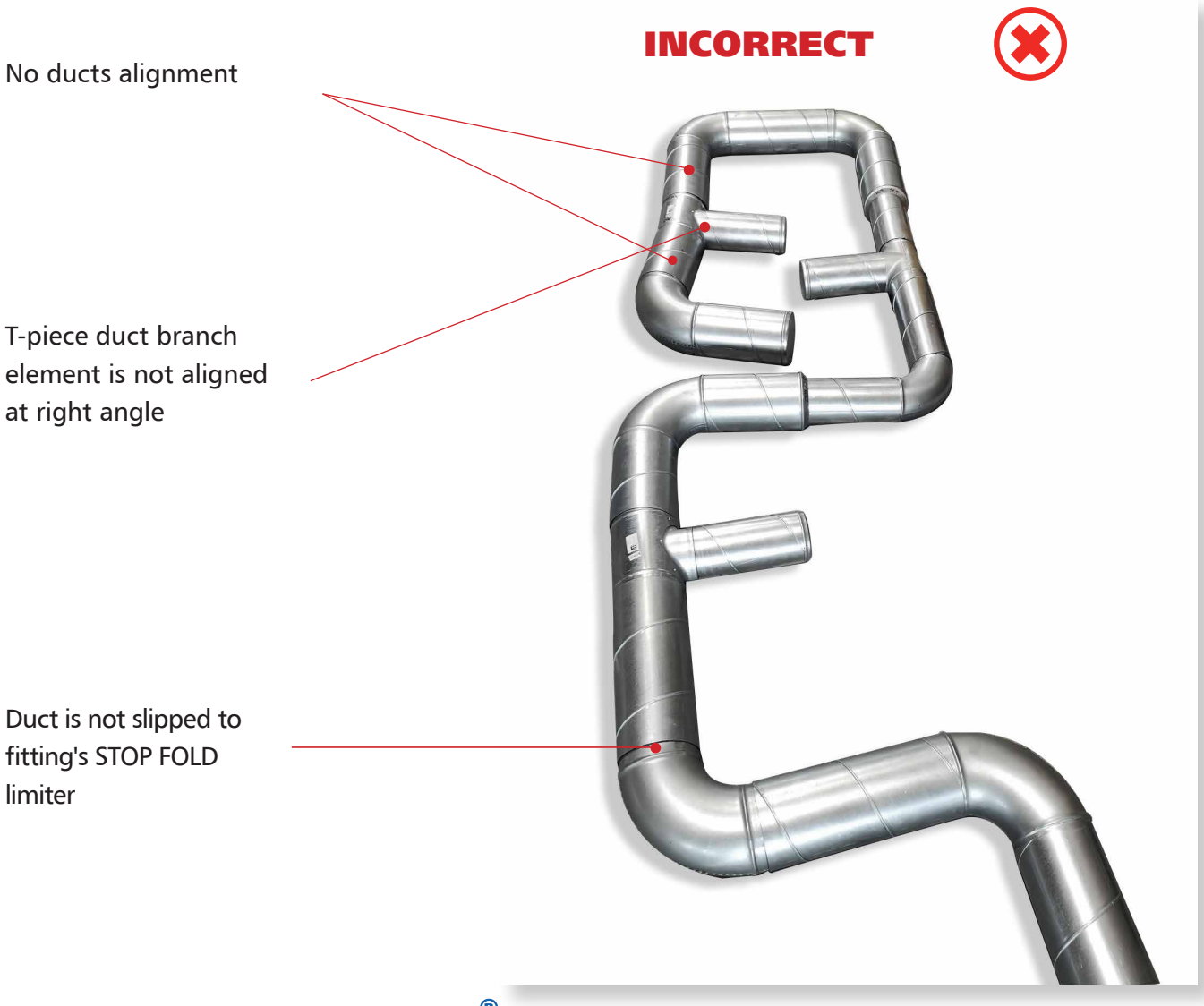

Correct duct alignment

T-piece duct branch alignment at right angle

For 90° bend, ductwork alignment should be at the right angle

Duct completely slipped to "stop fold" limiter of the fitting.

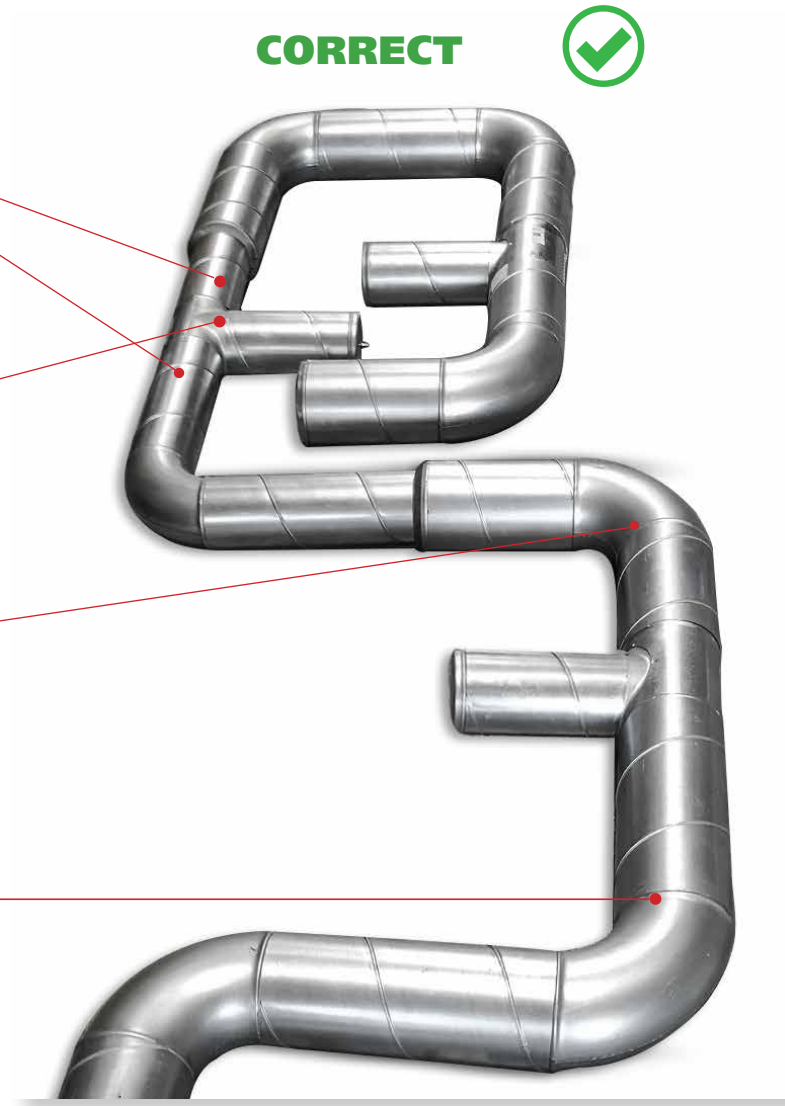

Leakage test procedure

- ventilation system for air tightness test should be mounted according to EN 12237:2005: "The section to be tested shall be sealed off from the rest of the system before commencing the test. The test sample shall contain a representative variety of duct dimensions and fittings. The ductwork surface area od the section shall be at least 10% of the total ductwork surface area, and if possible, at least 10m^2.

  NOTE: The nominal ratio between the total joint lenght (L) and ductwork surface area (A_j) is

  $$1 \leq \frac{L}{A_j} \leq 1{,}5 \text{ in } m^{-1}$$

  To sum up, it follows from the above that:
- surface area of tested ductwork installation section should have at least 10% of total surface area of ventilation system (minimum 10m2)
- per one square meter of ductwork there must be from 1 to 1.5m of duct connections length.

  Measurement of surface area has to be conducted according to EN 14239:2004.